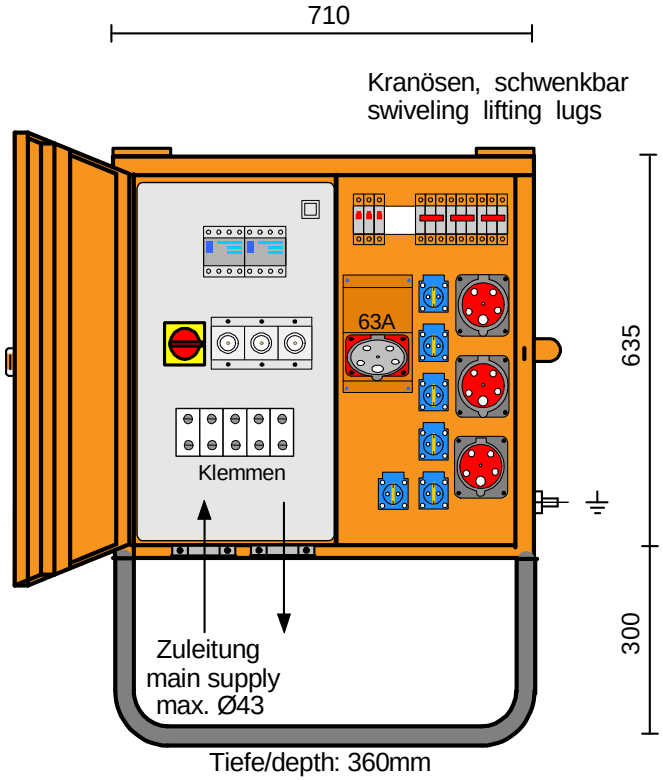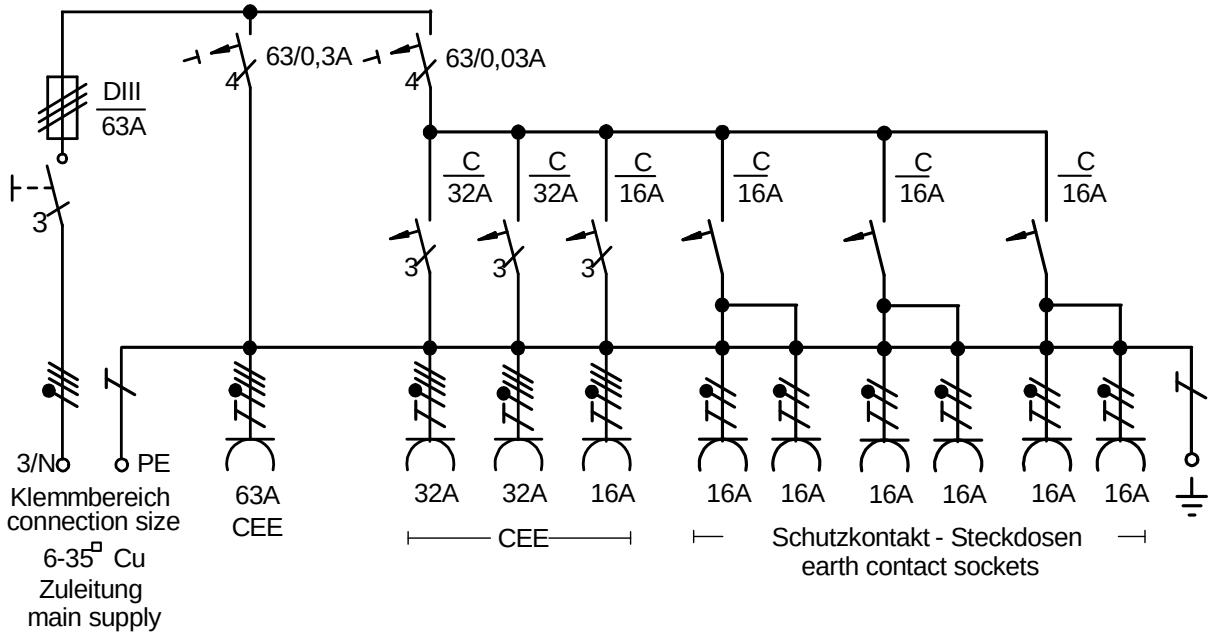Typ: **M-VEV 63/121-6/V2** **Art.Nr.:** **MZ69049**